Answer Key

EXTRA PROBLEMS – Make drawings.

Two tangent circles of radius 20" and 5" are externally tangent. Find the length of the common external tangent.

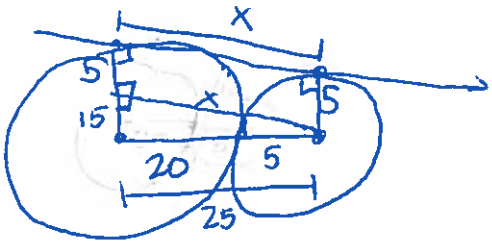

$x^2+15^2=25^2$

$x^2+225=625$

$x^2=400$

$x=20$

$\boxed{20''}$

If 2 pulleys with radii of 40" and 20" have centers 70" from each other. What is the belt length to the nearest hundredth of an inch needed for this pulley system?

$\cos\theta = \frac{20}{70}$

$\theta = 73.40°$

$\times\ 2$

$A = 146.8°$

$B = 360-146.8 = 213.2°$

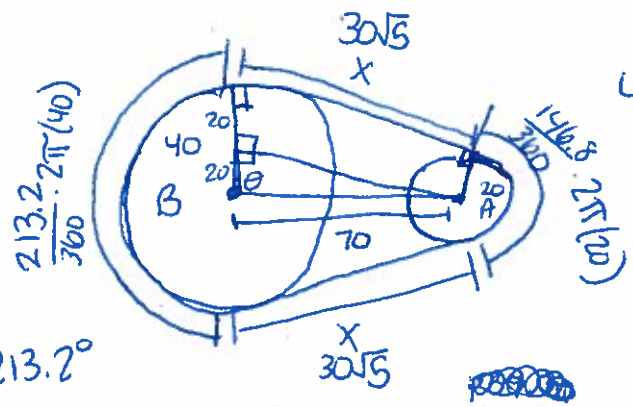

$20^2+x^2=70^2$

$400+x^2=4900$

$x^2=4500$

$x=30\sqrt{5}$

$\times\ 2$

$60\sqrt{5}$

Belt $= 148.84+60\sqrt{5}+51.24 \approx \boxed{334.25''}$

Quadrilateral WXYZ is circumscribed about ⊙P. If WX = 20, XY = 25, and YZ = 22, find WZ !!!

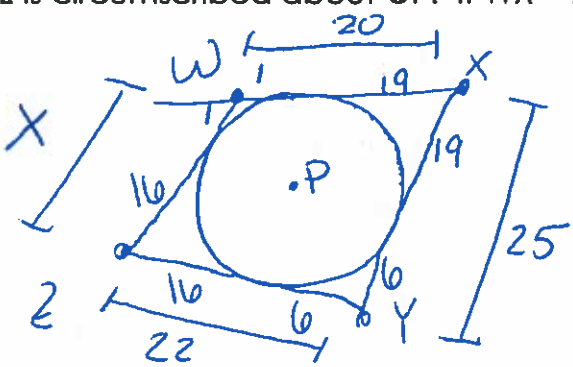

$\boxed{WZ = 17}$

Hexagon ABCDEF is circumscribed about ⊙O. If AB = 10, BC = 14, CD = 12, DE = 10, EF = 16, find AF.

$\boxed{AF=14}$
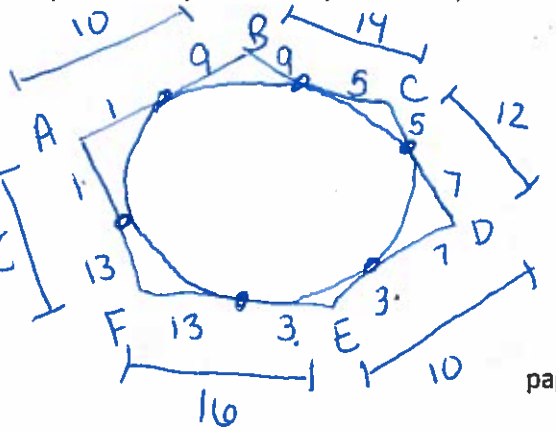
Sorry wrong pic